FLAMINGO™ Pet Products

Graphic dept.
Hagelberg 14
2440 Geel

Artwork printing specifications www.flamingo.be

B **Artwork ref.:** FLA_014896_MA_5384308_538430 • **Size:** 297 x 210mm
Date (final): 02/10/2023 • **Created with:** AI-CC • **Exported as:** PDFX-1a(2001)

COLOURS black
1
cutting guides NOT to print(!)

MATERIAL / FINISHING
Paper

Do not make any changes on this artwork without consulting your Flamingo purchaser

FLAMINGO™

Wooden Hayrack

Assembly instructions

Art.No.5384308 & 5384309

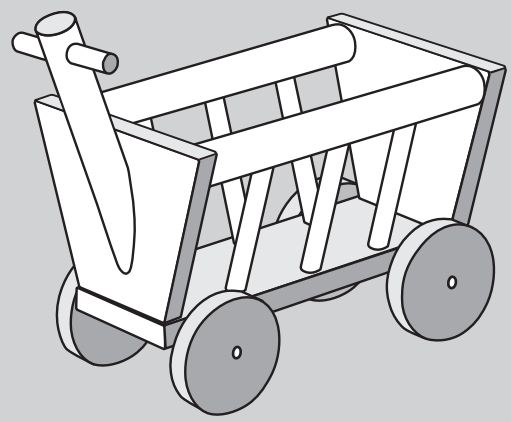

A	10x	3x20mm
B	4x	4x35mm

1

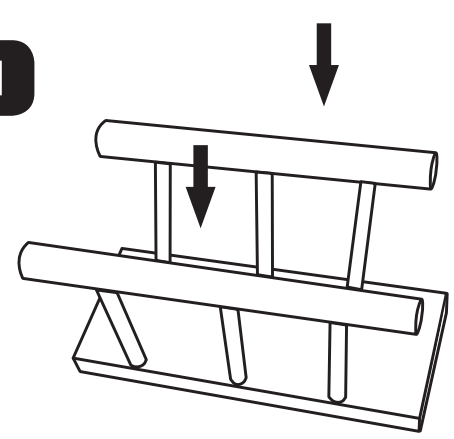

2

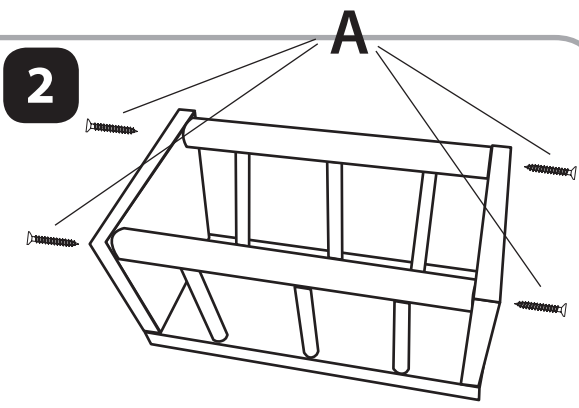

3

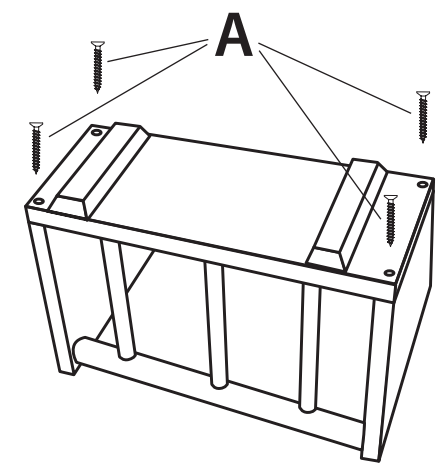

4

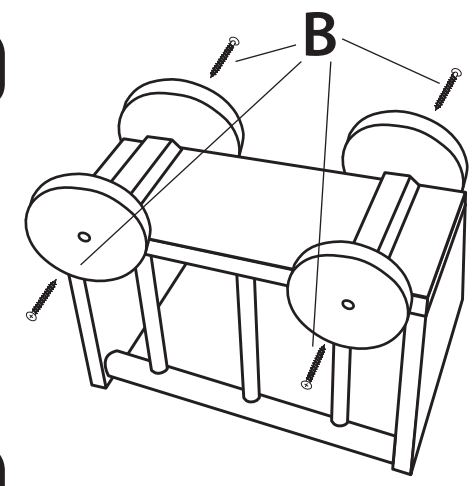
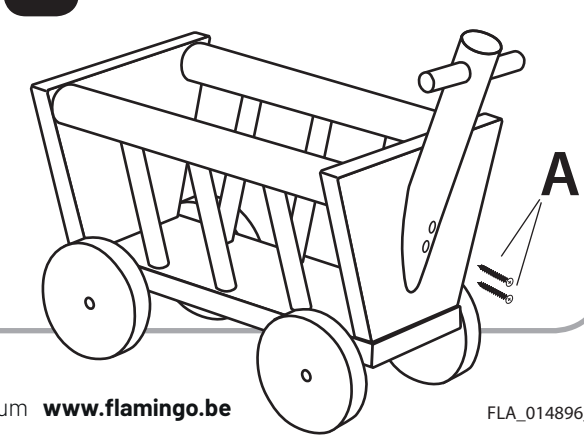
5