FLAMINGO™

George
Instructions

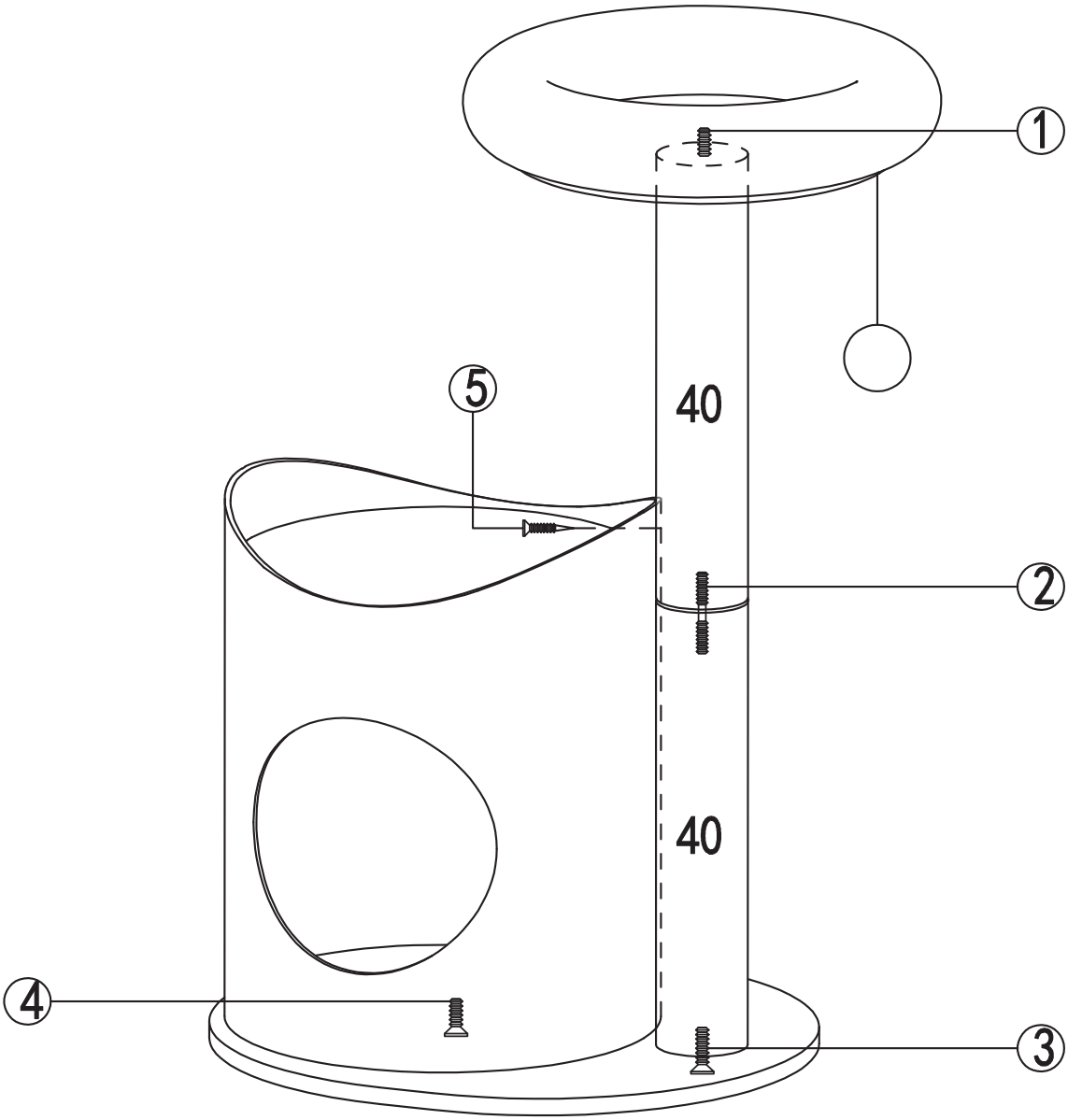

Art. No. 561047

Flamingo Pet Products nv • Hagelberg 14 • 2440 Geel - Belgium • **www.flamingo.be** • Made in China • FLA_007521_MA